Revisions					
Rev	Description	Date	Drawn	Checked	Rev. DD

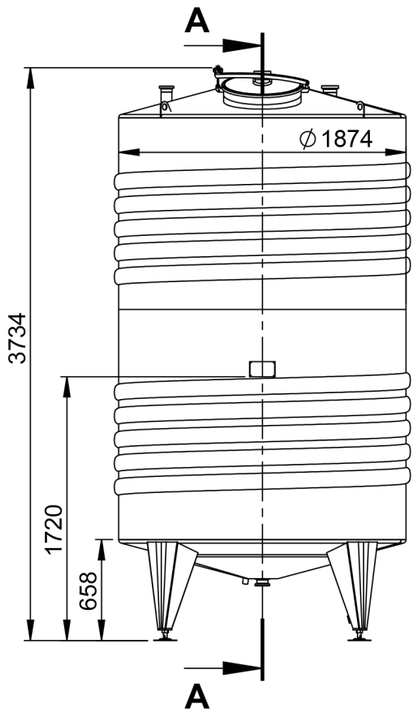

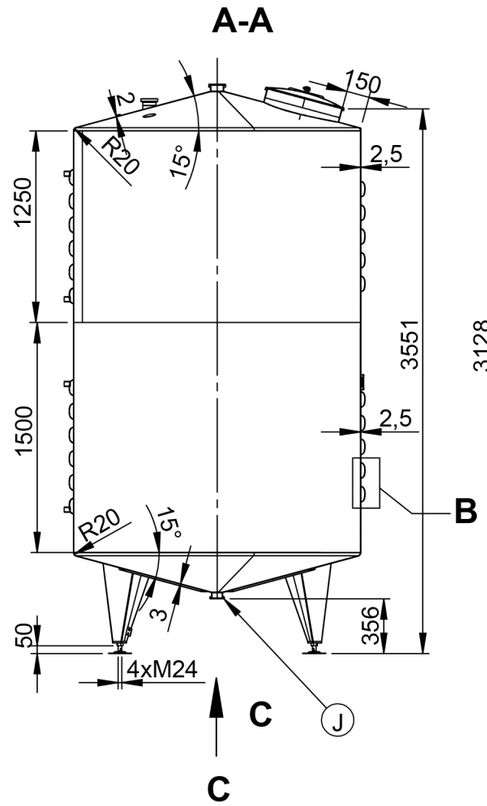

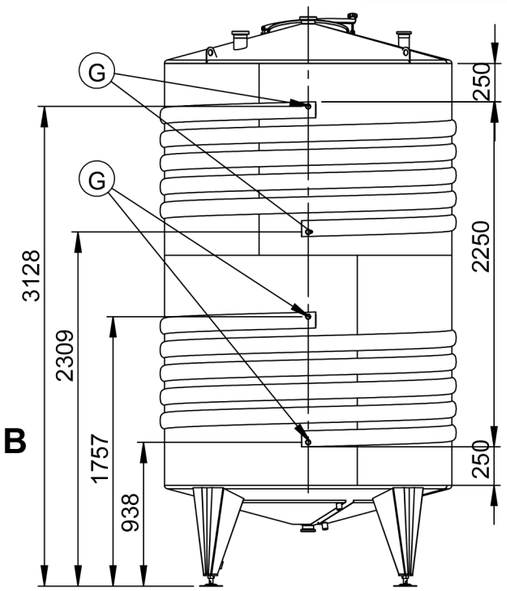

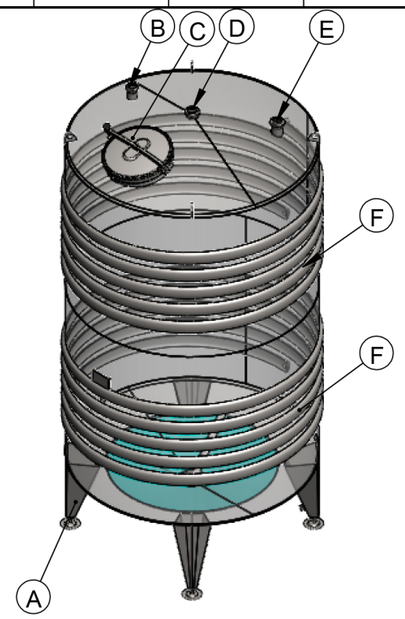

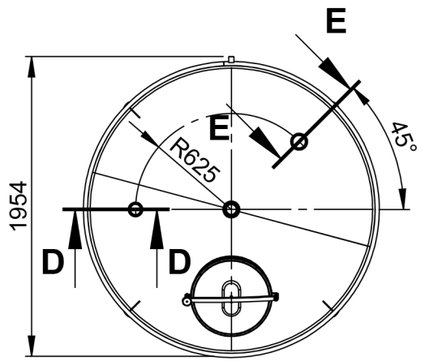

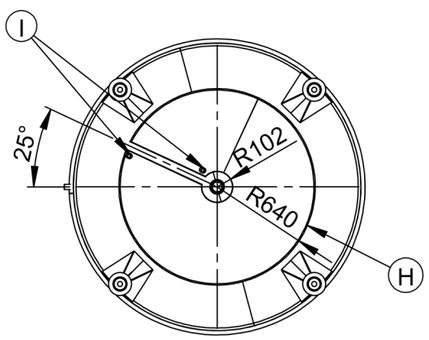

B 1 : 10

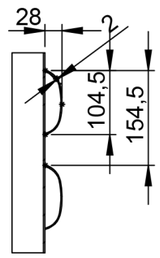

D-D 1 : 10

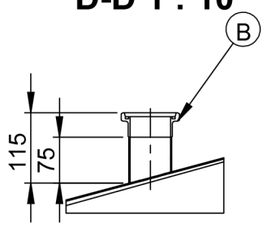

E-E 1 : 10

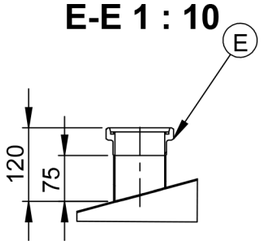

Item	Description	PN bar	DN mm.	Qty.
A	LEG ON ADJUSTABLE SUPPORT	-	-	4
B	INLET DN65 ON TANK TOP UP TO WELDING MALE DN65 DIN11851	atm.	65	1
C	UPPER MANHOLE DN500 Elica art.50/1p-6 EPDM-FDA GASKET	atm.	500	1
D	INLET DN80 CENTRICALLY MOUNTED ON TANK TOP UP TO WELDING MALE DN80 DIN11851	atm.	80	1
E	INLET DN80 FOR AIRVENT ON TANK TOP UP TO WELDING MALE DN80 DIN11851	atm.	80	1
F	HEAT EXCHANGE CHANNEL JACKET ON TANK SHELL WITH 5pcs COILS F=3m2 *heating agent hot water at Pmax=3bar and Tmax=100°C **heating agent steam at Pmax=0.49bar and Tmax=111°C	3 0,49	-	2
G	INLET/OUTLET CHANNEL JACKET ON TANK SHELL UP TO WELDING MALE G1"	3 0,49	G1"	4
H	HEAT-EXCHANGE DIMPLE JACKET ON TANK BOTTOM F=1.2m2 *heating agent hot water at Pmax=3bar and Tmax=100°C **heating agent steam at Pmax=0.49bar and Tmax=111°C	3 0,49	-	1
I	INLET/OUTLET DIMPLE JACKET ON TANK BOTTOM UP TO WELDING MALE G1"	3 0,49	G1"	2
J	TOTAL OUTLET DN65 UP TO WELDING MALE DN65 DIN11851	atm.	65	1

Straightness, flatness and parallelism - EN 13920 F								Linear dimensions - EN 13920 B							
≥30 ≤120	>120 ≤400	>400 ≤1000	>1000 ≤2000	>2000 ≤4000	>4000 ≤8000	>8000 ≤12000	>12000 ≤16000	≥2 ≤30	>30 ≤400	>400 ≤1000	>1000 ≤2000	>2000 ≤4000	>4000 ≤8000	>8000 ≤12000	>12000 ≤16000
1	1.5	3	4.5	6	8	10	12	±1	±2	±3	±4	±6	±8	±10	±12

Surface			Weld. seams		
	Outside	Matt 2B		Outside	Strip grinded 2x20 Ra<1,6
	Inside	Matt 2B		Inside	Strip grinded 2x20 Ra<1,6

TYPE K2-H12L

Geometrical volume	8100 ℓ	Geometrical volume - jacket	148 ℓ
Working pressure	Atmospheric	Working pressure - jacket	0/3 bar
Working temperature	-10/80°C	Working temperature - jacket	0/100°C
Maximum density	1.2kg/dm³	Jacket pressure drop	0.31 bar
Tare mass	636 kg	Material	1.4404/AISI 316L
Equipment output/voltage	-	Year of manufacture	

1.6	Drawn: C.A.	Scale 1:40	Weight 636	1.4404/ AISI 316L		
	Checked: K.I.	8100L				
	Approved: D.M.		Rev		Lang Eng	Sheet 1/1