Revisions					
Rev	Description	Zone	Date	Drawn	Checked

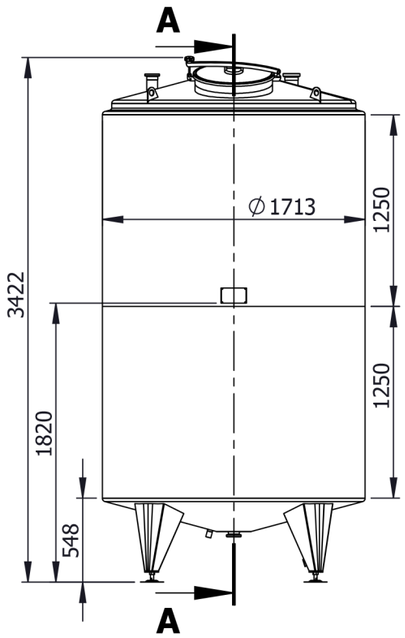

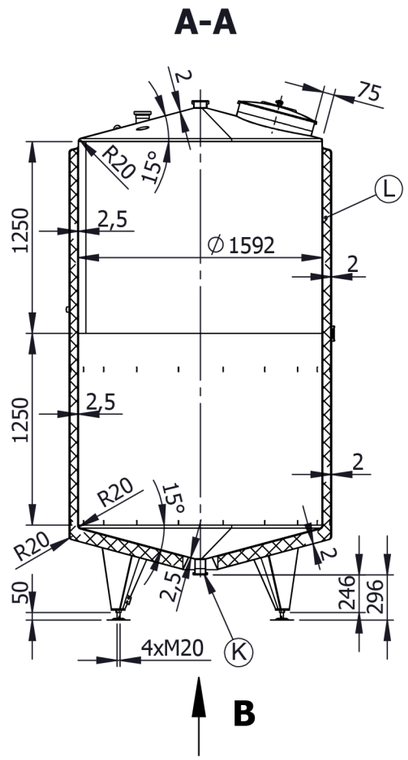

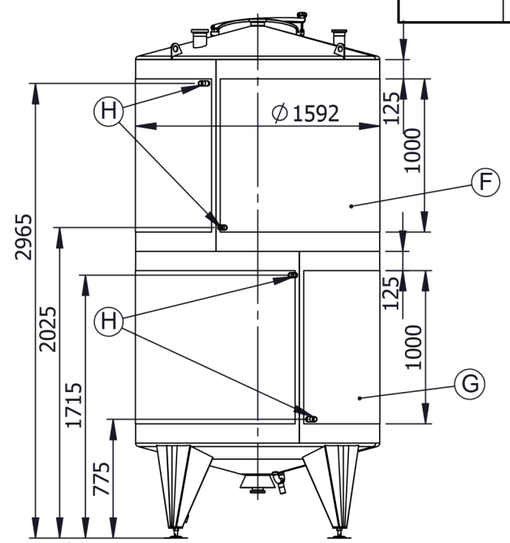

On this view are not shown insulation and cladding

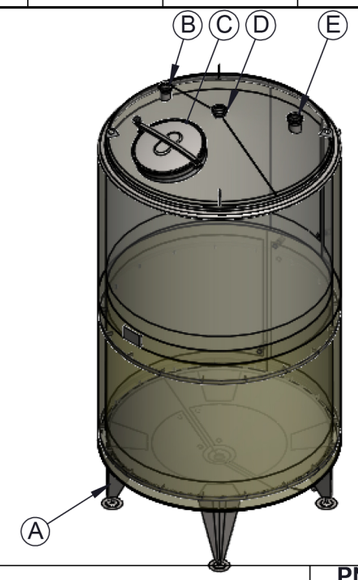

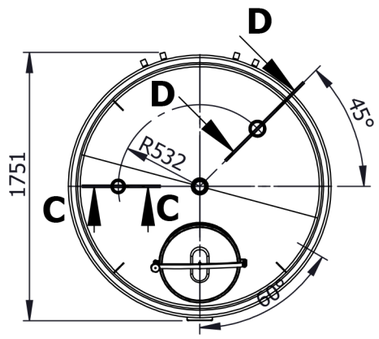

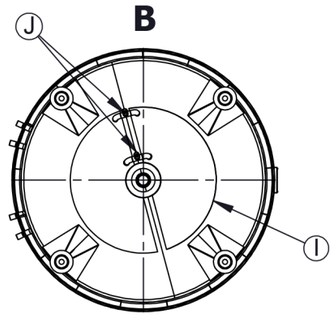

On this view are not shown insulation and cladding on the bottom

Item	Description	PN bar	DN mm.	Qty.
A	LEG ON ADJUSTABLE SUPPORT	-	-	4
B	INLET DN65 ON TANK TOP UP TO WELDING MALE DN65 DIN11851	atm.	65	1
C	UPPER MANHOLE DN500 Elica art. 50/1p-6 WITH EPDM-FDA-GASKET	atm.	500	1
D	INLET DN80 CENTRICALLY MOUNTED ON TANK TOP UP TO WELDING MALE DN80 DIN11851	atm.	80	1
E	INLET AIR VENT DN80 ON TANK TOP UP TO WELDING MALE DN80 DIN11851	atm.	80	1
F	UPPER LASER-WELDED DIMPLE JACKET ON TANK SHELL H=1000mm / F=4.9m2 *heating agent hot water at Pmax=3bar and Tmax=110°C	3	-	1
G	LOWER LASER-WELDED DIMPLE JACKET ON TANK SHELL H=1000mm / F=4.9m2 *heating agent hot water at Pmax=3bar and Tmax=110°C	3	-	1
H	INLET/OUTLET DIMPLE JACKET ON TANK SHELL UP TO WELDING MALE G1"	3	G1"	4
I	LASER-WELDED DIMPLE JACKET ON TANK BOTTOM F=0.62m2 *heating agent hot water at Pmax=3bar and Tmax=110°C	3	-	1
J	INLET/OUTLET DIMPLE JACKET ON TANK BOTTOM UP TO WELDING MALE G1"	3	G1"	2
K	TOTAL OUTLET DN65 UP TO WELDNIG MALE DN50 DIN11851	atm.	65	1
L	INSULATION MINERAL WOOL 50mm ON TANK SHELL AND 80mm ON BOTTOM WITH STAINLESS STEEL AISI 304L WELDED CLADDING	-	-	1

Straightness, flatness and parallelism - EN 13920 F								Linear dimensions - EN 13920 B							
≥30 ≤120	>120 ≤400	>400 ≤1000	>1000 ≤2000	>2000 ≤4000	>4000 ≤8000	>8000 ≤12000	>12000 ≤16000	≥2 ≤30	>30 ≤400	>400 ≤1000	>1000 ≤2000	>2000 ≤4000	>4000 ≤8000	>8000 ≤12000	>12000 ≤16000
1	1.5	3	4.5	6	8	10	12	±1	±2	±3	±4	±6	±8	±10	±12

Surface	Outside	Matt 2B	Weld. seams	Outside	Strip grinded 2x20 Ra<1,6
	Inside	Matt 2B		Inside	Flat grinded to Ra<0,8

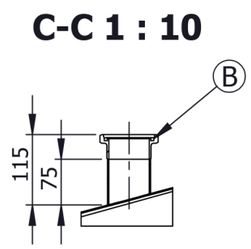

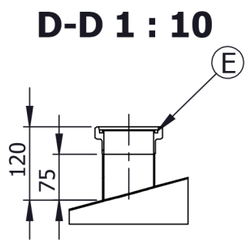

TYPE K3-H12W.IL

Serial number	119 903 13		
Geometrical volume	5200 ℓ	Geometrical volume - jacket	19 ℓ
Working pressure	Atmospheric	Working pressure - jacket	0/3 bar
Working temperature	-10/100°C	Working temperature - jacket	-10/110°C
Maximum density	1.2kg/dm³	Jacket pressure drop	-
Tare mass	760 kg	Material	1.4404 / AISI 316L
Equipment output/voltage	-	Year of manufacture	

1.6	Drawn: K.N.	Scale 1:40	Weight	1.4404/ AISI 316L		
	Checked: K.I.	5200L				
	Approved: D.M.		Rev	14.1.2019 г.	Lang Eng	Sheet 1/1