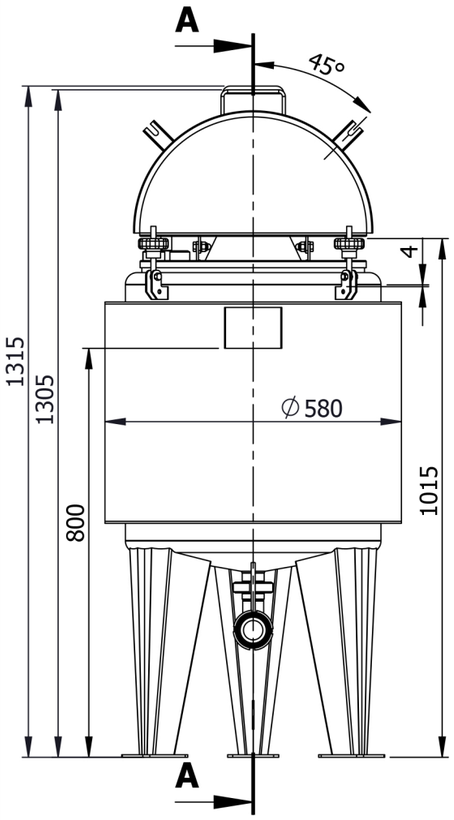

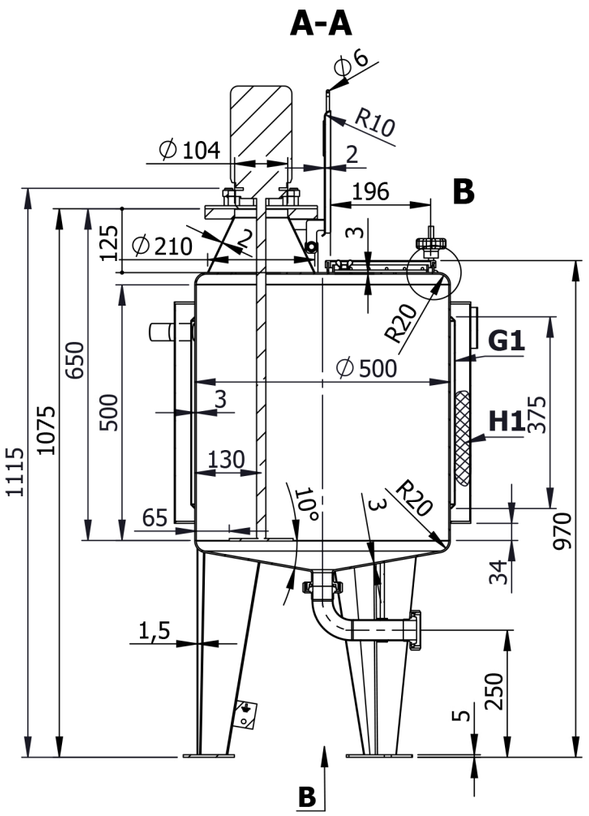

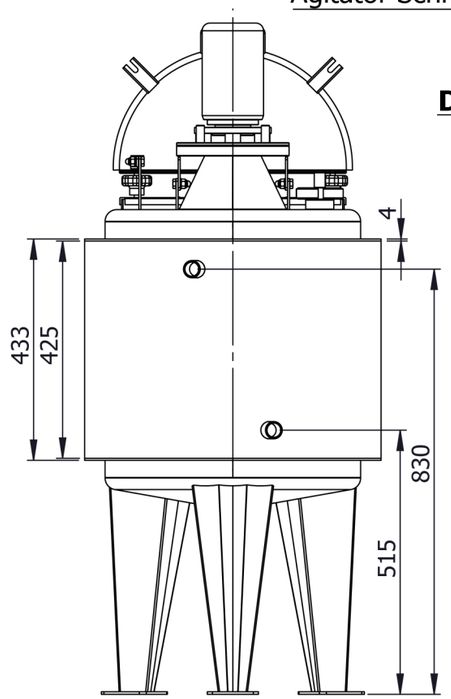

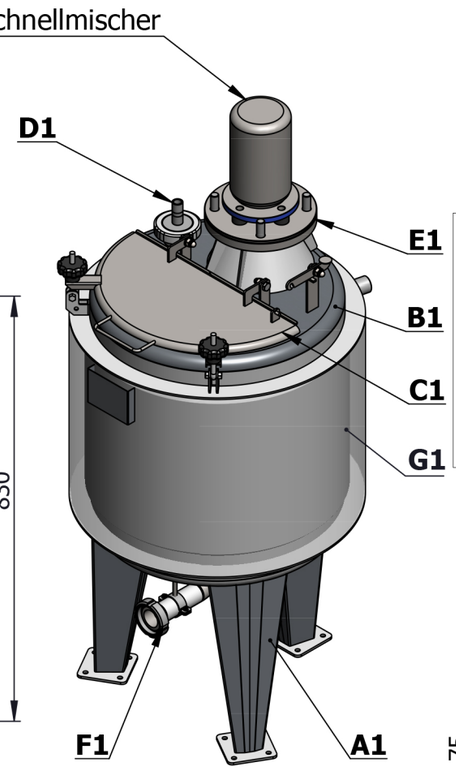

Construction date: 2015
Material vessel: AISI316/AISI304
Capacity: 100 L
Workpressure: ATM.
Workpressure coil: 3 bar
Maximal density: 1,2 kg/dm³

D-D 1 : 8

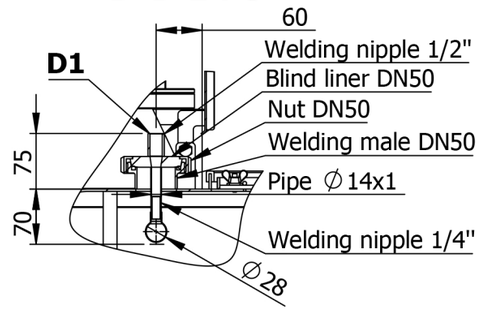

B 1 : 3

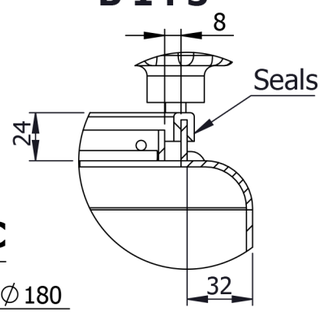

C-C 1 : 2

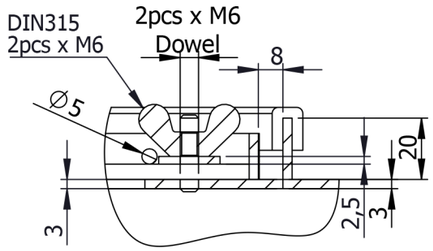

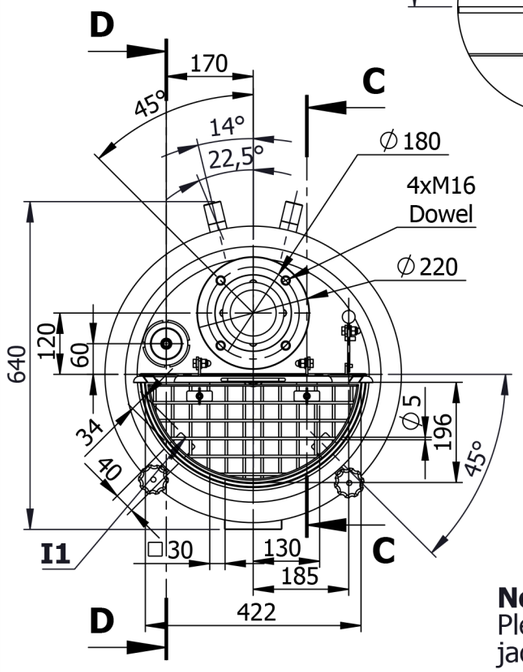

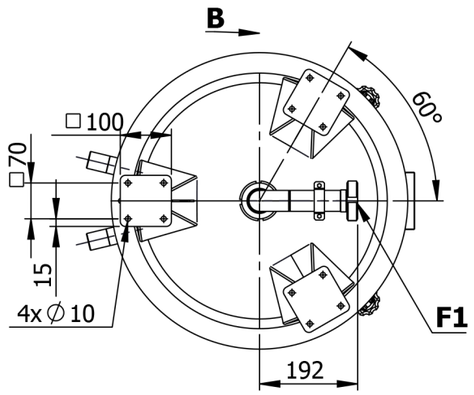

Note:
Please keep in mind that the temperature in the heat exchange jacket is at 100˚C ,the surface temperature can be over 40˚C.

Schnellmischer:
1. RW9532V6N 0,25kW 1500rpm 400V
2. RW9533V6N 0,12kW 680rpm 400V

Item	Description	PN MPa	DN mm.	Qty.
A1	LEG ON ANCHOR PLATE (anchor bolts are not included) - AISI 304	-	-	3
B1	1/2 FIXED LID - AISI 316	-	-	1
C1	1/2 HINGED LID - AISI 316	-	-	1
D1	DISMOUNTABLE STATIC CIP SPRAY BALL Φ28 360° UP TO WELDING MALE NIPPLE - AISI 316	atm.	G1/2"	1
E1	INLET FOR AGITATOR UP TO FLANGE ∅220mm s20mm - AISI 316	-	100	1
F1	DISMOUNTABLE TOTAL OUTLET UP TO WELDING LINER AND NUT DIN 11851 - AISI 316	atm.	40	1
G1	DIMPLE JACKET ON TANK SHELL H=375mm F=0.55m2 Tmax=100˚C-AISI 304 INLET/OUTLET ON JACKET UP TO WELDING MALE NIPPLE	0.3	G1"	1
H1	INSULATION MINERAL WOOL 40mm WITH DECORATIVE CASING DIMPLE JACKET ON THE TANK SHELL D=580mm H=425mm 2.0mm-AISI 304	-	40	1
I1	SAFETY GRID ON HINGED LID - AISI 316	-	-	1

Surface	Outside	2B	Welding seam	Outside	strip grinded to Ra<1,6
	Inside	2B		Inside	flat grinded to Ra<0,8

1.6 min.0,5x45°

Not-indicated tolerances of dimensions of length and angles, shapes and positions are according to EN ISO 13920:2006

Drawn.: **K.N**	Scale 1:12	Mass 96.0	AISI 316 AISI 304	
Checket: **K.I**	=0,1m3			
Eng.App.: **D.M**		30.3.2015 г.		Sheet 1/1