Revisions					
Rev	Description	Zone	Date	Drawn	Checked

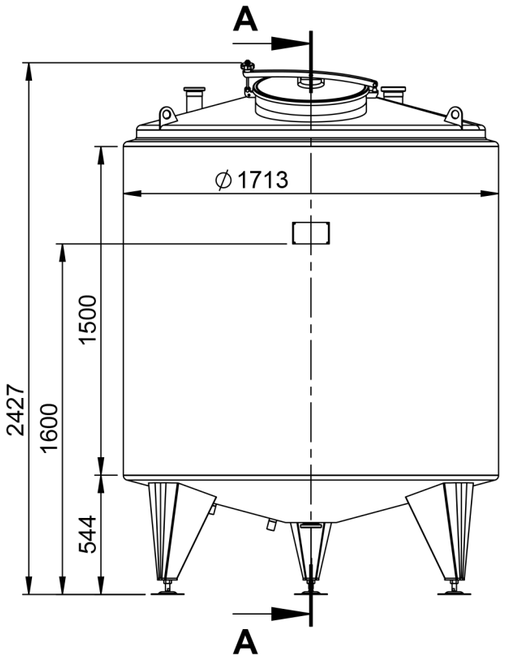

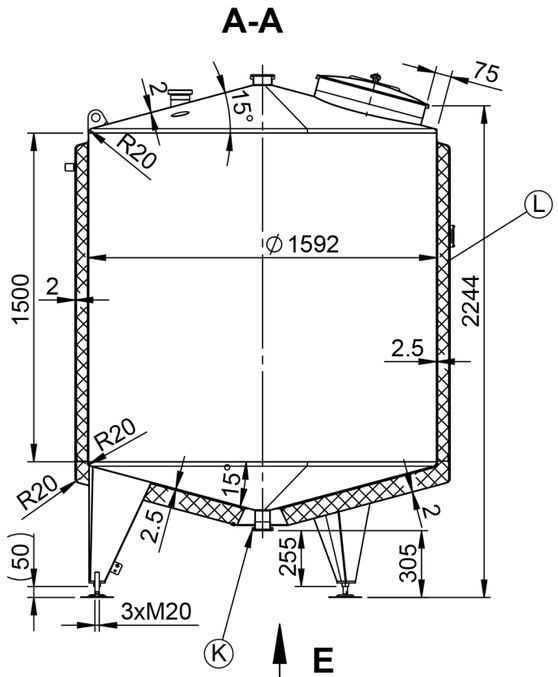

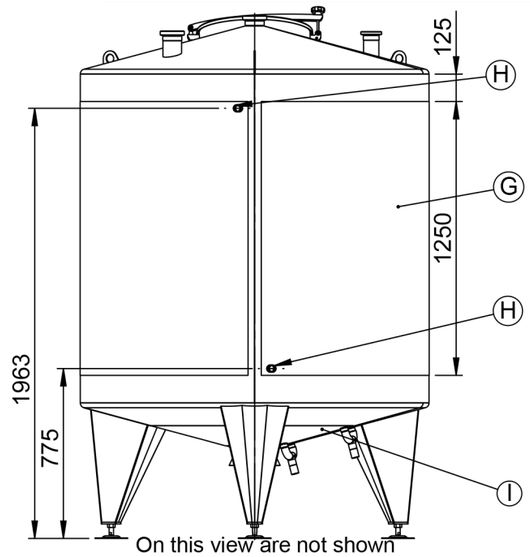

On this view are not shown insulation and cladding

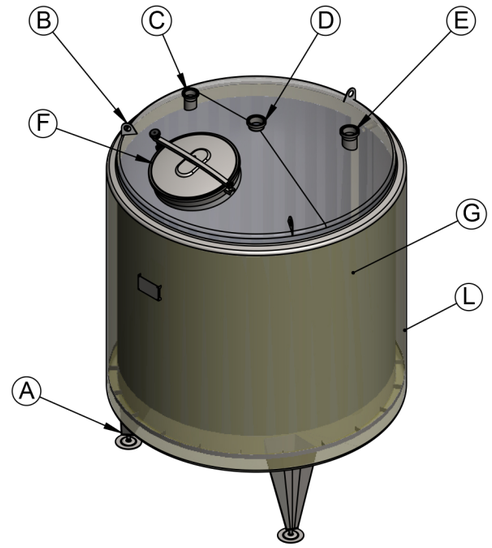

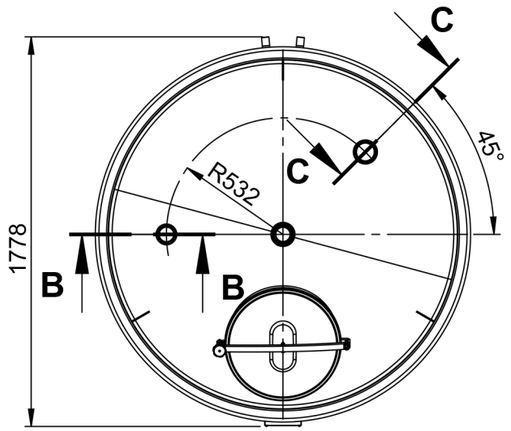

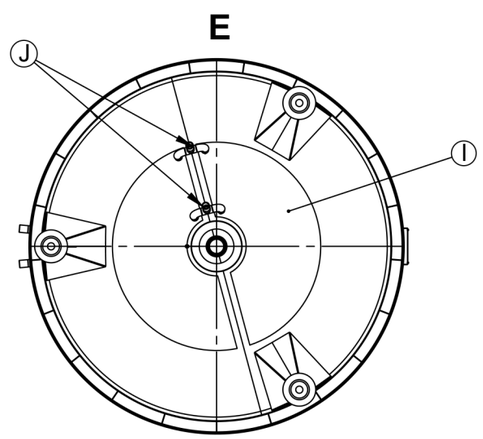

On this view are not shown insulation and cladding on the bottom

Item	Description	PN bar	DN mm.	Qty.
A	LEG ON ADJUSTABLE SUPPORT	-	-	3
B	LIFTING LUG	-	-	3
C	INLET DN65 ON TANK TOP UP TO WELDING MALE DN65 DIN11851	atm.	65	1
D	INLET DN80 CENTRICALLY MOUNTED ON TANK TOP UP TO WELDING MALE DN80 DIN11851	atm.	80	1
E	INLET DN80 FOR AIRVENT ON TANK TOP UP TO WELDING MALE DN80 DIN11851 *air vent is not included	atm.	80	1
F	UPPER MANHOLE DN500 Elica art.50/1p-6 EPDM-FDA GASKET	atm.	500	1
G	LASER-WELDED DIMPLE JACKET ON TANK SHELL H=1250mm / F=6.1m2 *heating agent hot water at Pmax=3bar and Tmax=110°C	3	-	1
H	INLET/OUTLET DIMPLE JACKET ON TANK SHELL UP TO WELDING MALE G1"	3	G1"	2
I	LASER-WELDED DIMPLE JACKET ON TANK BOTTOM F=0.62m2 *heating agent hot water at Pmax=3bar and Tmax=110°C	3	-	1
J	INLET/OUTLET DIMPLE JACKET ON TANK BOTTOM UP TO WELDING MALE G1"	3	-	2
K	TOTAL OUTLET DN65 UP TO WELDING MALE DN65 DIN11851 *outlet without bend and horizontal pipe	atm.	65	1
L	INSULATION MINERAL WOOL 50mm ON TANK SHELL AND 80mm ON BOTTOM WITH STAINLESS STEEL AISI304L WELDED CLADDING s=2mm	-	-	1

Straightness, flatness and parallelism - EN 13920 F								Linear dimensions - EN 13920 B							
≥30 ≤120	>120 ≤400	>400 ≤1000	>1000 ≤2000	>2000 ≤4000	>4000 ≤8000	>8000 ≤12000	>12000 ≤16000	≥2 ≤30	>30 ≤400	>400 ≤1000	>1000 ≤2000	>2000 ≤4000	>4000 ≤8000	>8000 ≤12000	>12000 ≤16000
1	1.5	3	4.5	6	8	10	12	±1	±2	±3	±4	±6	±8	±10	±12

Surface			Weld. seams		
	Outside	Matt 2B		Outside	Strip grinded 2x20 Ra<1,6
	Inside	Matt 2B		Inside	Flat grinded to Ra<0,8

B-B 1 : 10

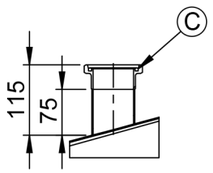

C-C 1 : 10

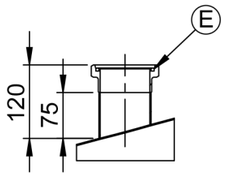

TYPE K3-H12W.IL

Geometrical volume	3300 ℓ	Geometrical volume - jacket	12 ℓ
Working pressure	Atmospheric	Working pressure - jacket	0/3 bar
Working temperature	-10/100°C	Working temperature - jacket	-10/110°C
Maximum density	1.2kg/dm³	Jacket pressure drop	-
Tare mass	516 kg	Material	1.4404 / AISI 316L
Equipment output/voltage	-	Year of manufacture	

1.6	Drawn: Z.G	Scale 1:28	Weight	.-3300L	
	Checked: K.I				
	Approved: D.M	11990312.00.00.00.00-00.00	Rev	20.9.2019 г.	Lang Eng / Sheet 1/1