Revisions					
Rev	Description	Zone	Date	Drawn	Checked

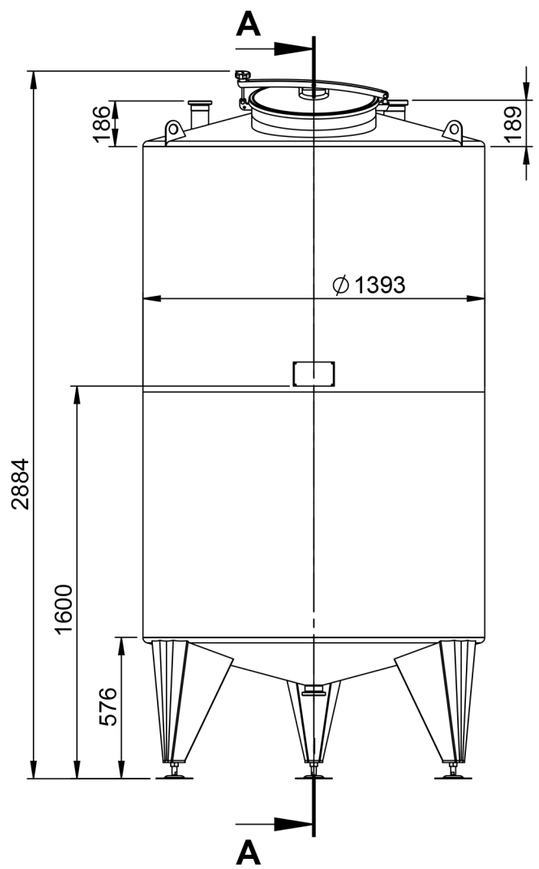

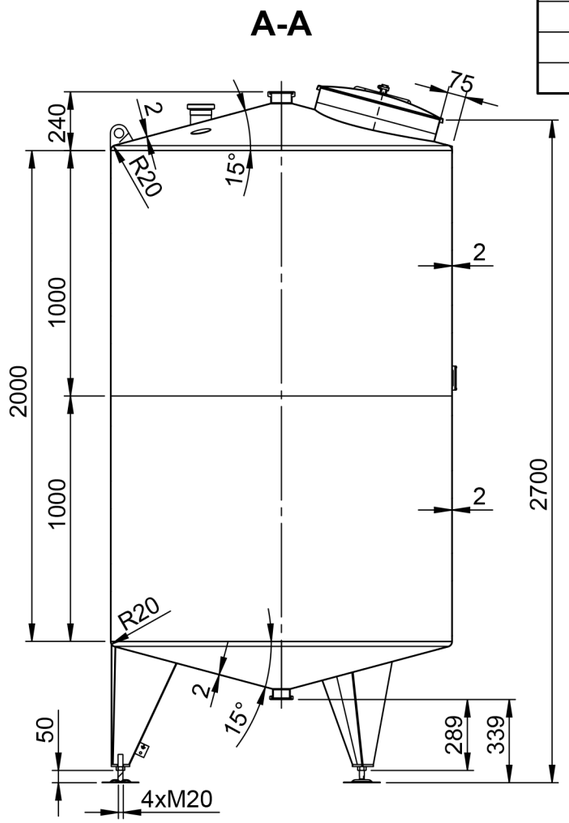

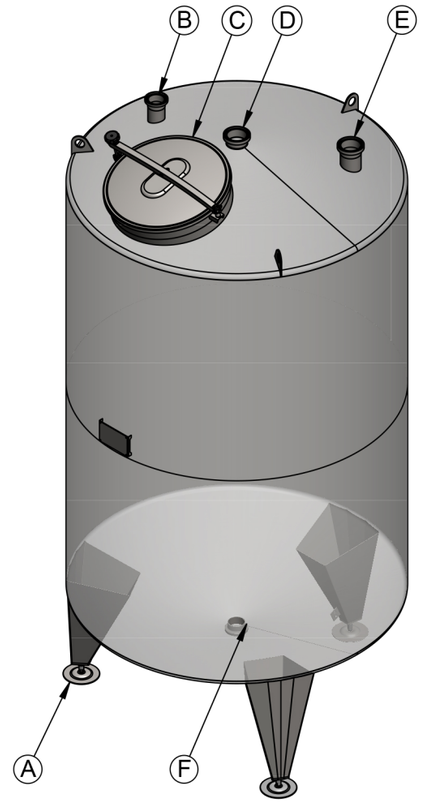

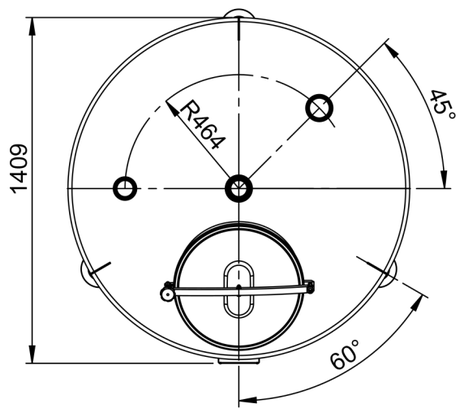

Item	Description	PN bar	DN mm.	Qty.
A	LEG ON ADJUSTABLE SUPPORT	-	-	3
B	INLET DN65 ON TANK TOP UP TO WELDING MALE DN65 DIN11851	atm.	65	1
C	UPPER MANHOLE DN500 Elica art.50/1p-6 WITH EPDM-FDA-GASKET	atm.	500	1
D	INLET DN80 CENTRICALLY MOUNTED ON TANK TOP UP TO WELDING MALE DN80 DIN11851	atm.	80	1
E	INLET AIRVENT DN80 ON TANK TOP UP TO WELDING MALE DN80 DIN 11851	atm.	80	1
F	TOTAL OUTLET DN65 UP TO WELDING MALE DN65 DIN11851	atm.	65	1

Straightness, flatness and parallelism - EN 13920 F								Linear dimensions - EN 13920 B							
≥30 ≤120	>120 ≤400	>400 ≤1000	>1000 ≤2000	>2000 ≤4000	>4000 ≤8000	>8000 ≤12000	>12000 ≤16000	≥2 ≤30	>30 ≤400	>400 ≤1000	>1000 ≤2000	>2000 ≤4000	>4000 ≤8000	>8000 ≤12000	>12000 ≤16000
1	1.5	3	4.5	6	8	10	12	±1	±2	±3	±4	±6	±8	±10	±12

Surface			Weld. seams		
	Outside	Matt 2B		Outside	Strip grinded 2x20 Ra<1,6
	Inside	Matt 2B		Inside	Flat grinded to Ra<0,8

1.6	Drawn: S.S.	Scale 1:25	Weight			
	Checked: K.I.	3200L				
	Approved: D.M.		Rev	10.1.2019 г.	Lang Eng	Sheet 1/1

Geometrical volume	3200 ℓ	Geometrical volume - jacket	-
Working pressure	Atmospheric	Working pressure - jacket	-
Working temperature	-10/80°C	Working temperature - jacket	-
Maximum density	1.2kg/dm³	Jacket pressure drop	-
Tare mass	226 kg	Material	1.4404/ AISI 316L
Equipment output/voltage	-	Year of manufacture	