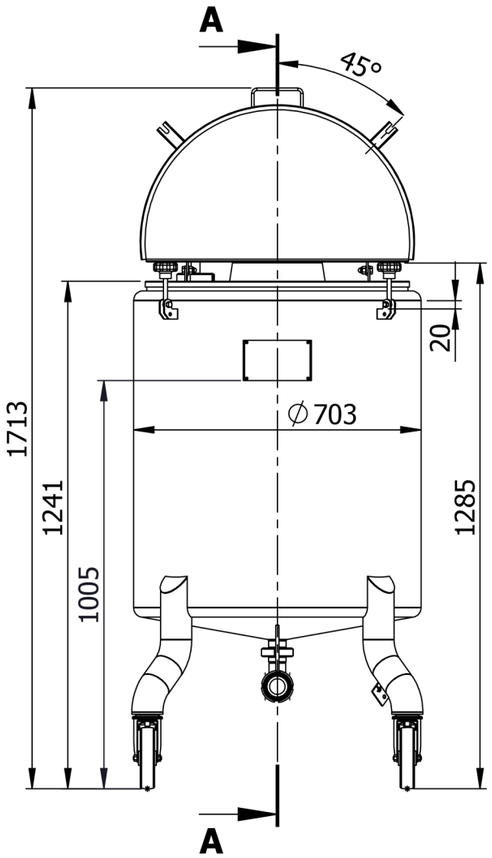

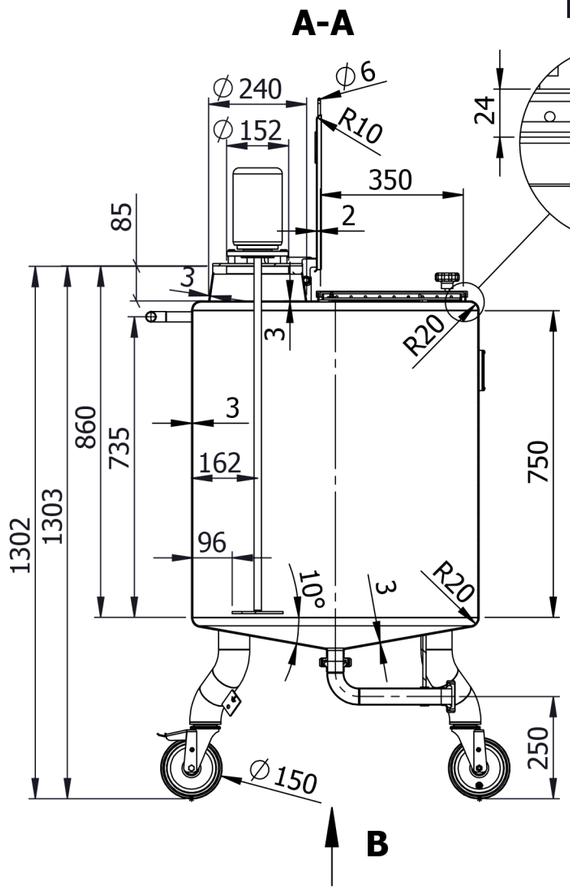

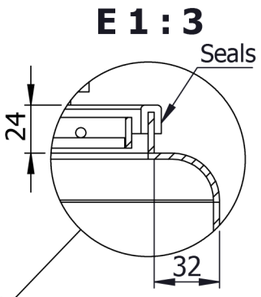

Revisions					
Rev	Description	Date	Drawn	Checked	Rev. DD

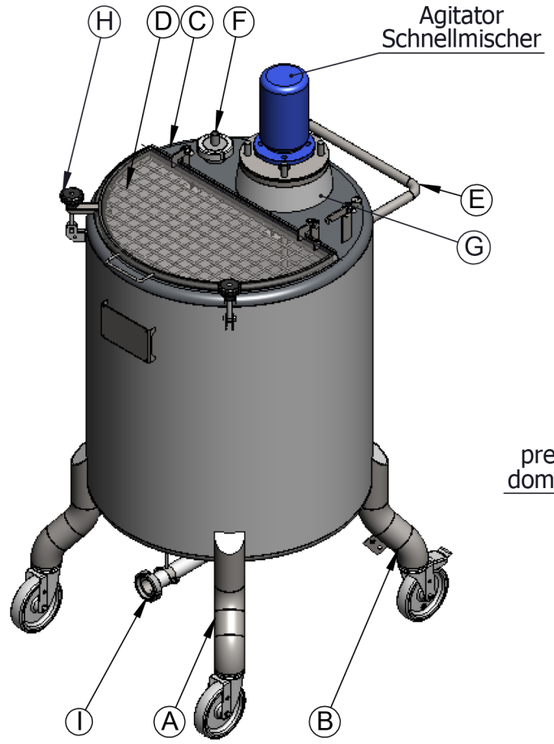

TYPE VC-SCA

Geometrical volume	300 ℓ	Geometrical volume - jacket	-
Working pressure	Atmospheric	Working pressure - jacket	-
Working temperature	-10/80°C	Working temperature - jacket	-
Maximum density	1.2kg/dm³	Jacket pressure drop	-
Tare mass	106 kg	Material	1.4404/AISI 316L
Equipment output/voltage	-	Year of manufacture	2017

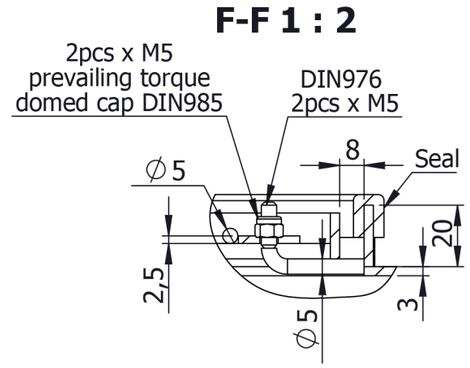

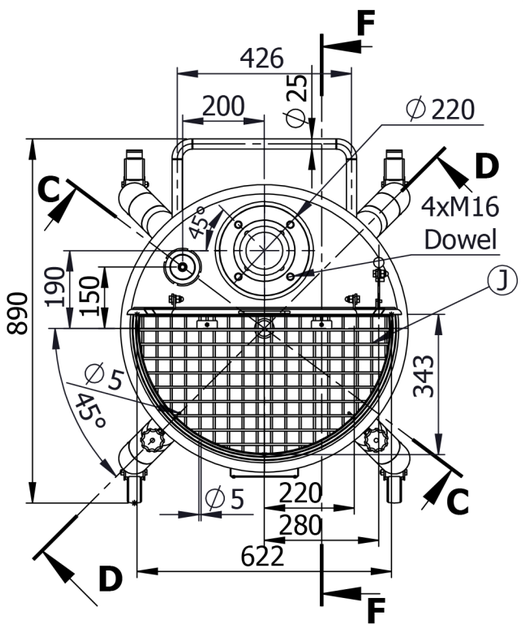

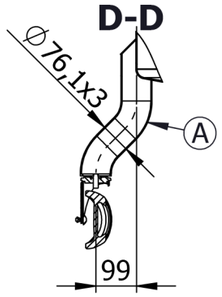

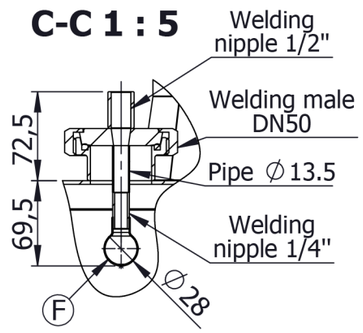

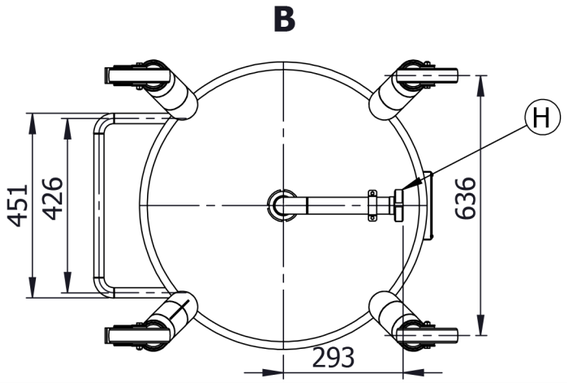

Item	Description	PN bar	DN mm.	Qty.
A	TUBULAR LEG ON WHEEL WITHOUT BREAK	-	-	2
B	TUBULAR LEG ON WHEEL WITH BREAK	-	-	2
C	1/2 FIXED LID	-	-	1
D	1/2 HINGED LID	-	-	1
E	HOLDER FOR PUSHING THE TANK	-	-	1
F	DISMOUNTABLE STATIC CIP SPRAY BALL ∅28 360° UP TO WELDING MALE NIPPLE	atm.	G1/2"	1
G	CONICAL INLET FOR AGITATOR UP TO FLANGE DN100 ∅220mm -agitator and mounting of the agitator are not included	atm.	-	1
H	TIGHTNER FOR HINGED LID	-	-	2
I	DISMOUNTABLE TOTAL OUTLET UP TO WELDING LINER AND NUT DIN 11851	atm.	40	1
J	SAFETY GRID ON HINGED LID	-	-	1

Straightness, flatness and parallelism - EN 13920 F								Linear dimensions - EN 13920 B							
≥30 ≤120	>120 ≤400	>400 ≤1000	>1000 ≤2000	>2000 ≤4000	>4000 ≤8000	>8000 ≤12000	>12000 ≤16000	≥2 ≤30	>30 ≤400	>400 ≤1000	>1000 ≤2000	>2000 ≤4000	>4000 ≤8000	>8000 ≤12000	>12000 ≤16000
1	1.5	3	4.5	6	8	10	12	±1	±2	±3	±4	±6	±8	±10	±12

Surface			Weld. seams		
	Outside	Matt 2B		Outside	Strip grinded 2x20 Ra<1,6
	Inside	Matt 2B		Inside	Flat grinded to Ra<0,8

1.6	Drawn: K.N.	Scale 1:15	Weight 105	1.4404/ AISI 316L			
	Checked: K.I.				300L		
	Approved: D.M.		Rev	15.6.2017	Lang Eng	Sheet 1/1	