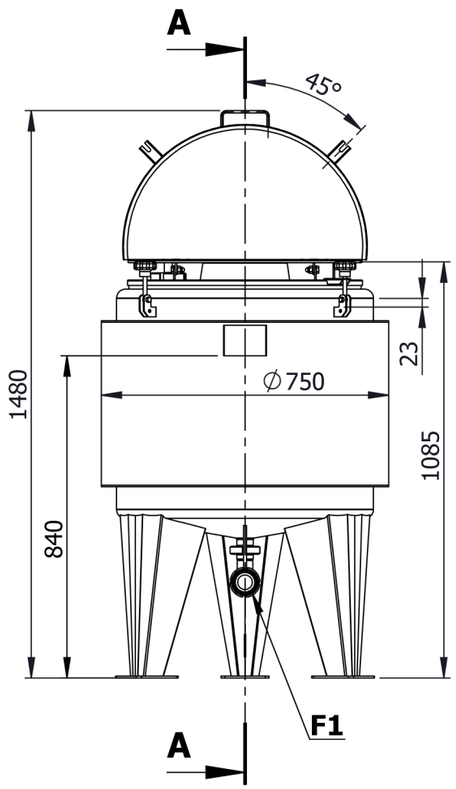

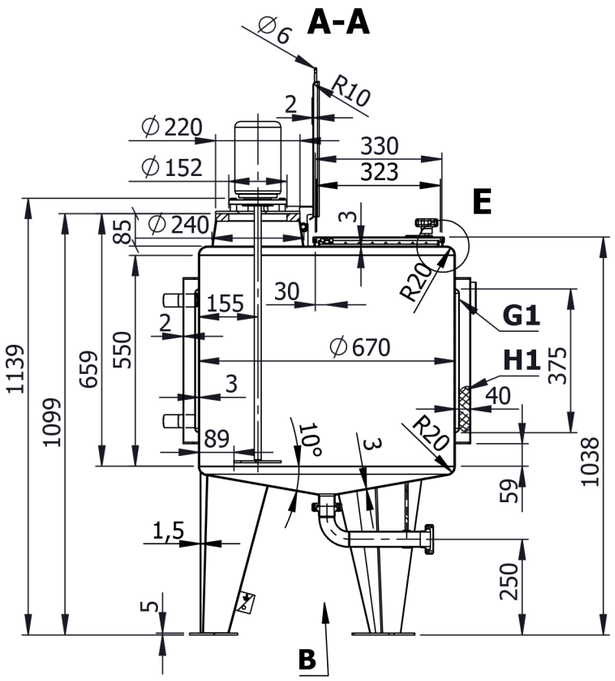

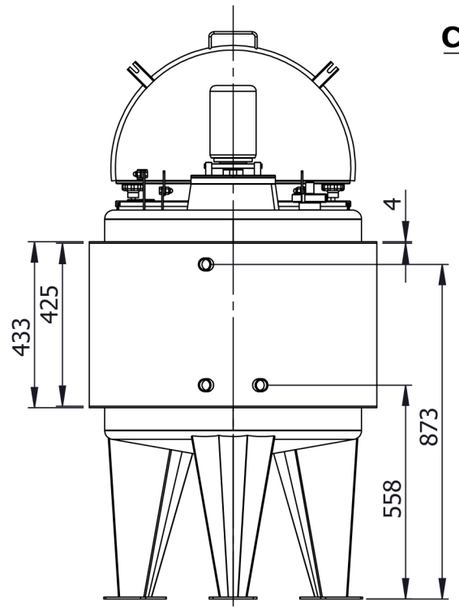

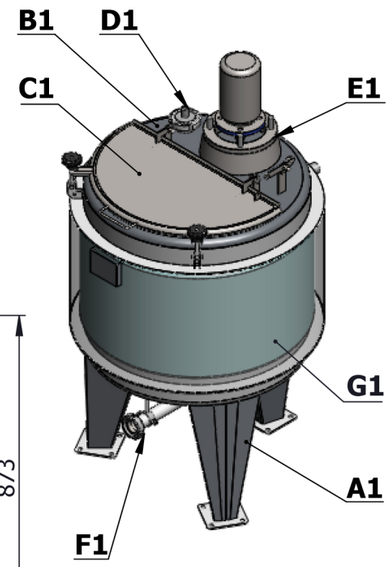

Construction date: 2015

Material vessel: AISI316/AISI304

Capacity: 200 L

Workpressure: ATM.

Workpressure coil: 3bar

Maximal density: 1,2 kg/dm³

C-C 1 : 5

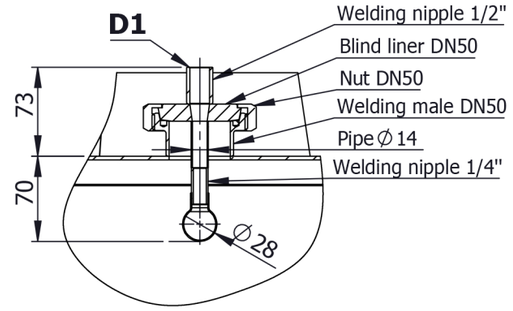

Schnellmischer:
1.RW9248V6N 0,37kW 1500rpm 400V
2.RW9250V6N 0,12kW 680rpm 400V

D-D 1 : 2

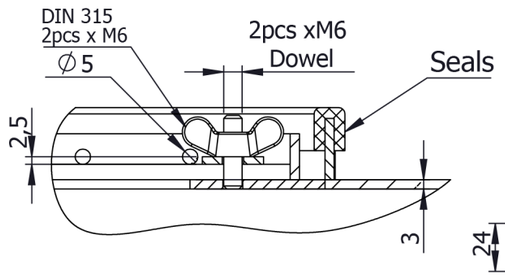

E 1 : 3

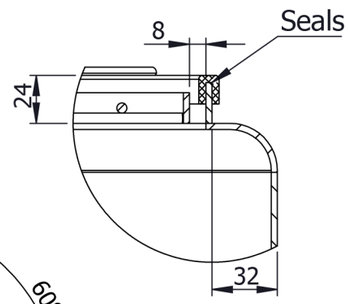

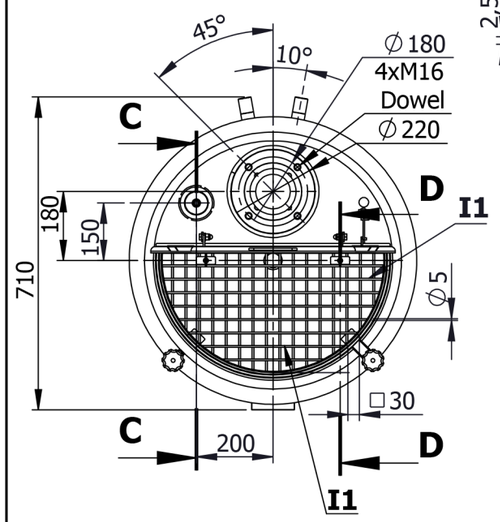

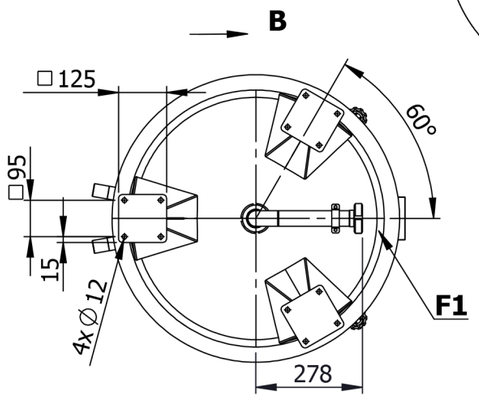

Note:
Please kepp mind thet in the heat exchange jacket is at 100˚ C,the surface temparature can be 40˚ C.

Item	Description	PN MPa	DN mm.	Qty.
A1	LEG ON ANCHOR PLATE (anchor bolts are not included)	-	-	3
B1	1/2 FIXED LID - AISI 316	-	-	1
C1	1/2 HINGED LID - AISI 316	-	-	1
D1	DISMOUNTABLE STATIC CIP SPRAY BALL Φ28 360˚ UP TO WELDING MALE NIPPLE - AISI 316	atm.	1/2"	1
E1	INLET FOR AGITATOR UP TO FLANGE ∅220 s20 - AISI 316 - agitator and mounting of the agitator are not included	-	100	1
F1	DISMOUNTABLE TOTAL OUTLET UP TO WELDING LINER AND NUT DIN11851 - AISI 316	atm.	40	1
G1	DIMPLE JACKET ON TANK SHELL H=375mm F=0.75m2 Pmax=3bar F=0.75m2 Tmax=100˚C - AISI 304 INLET/OUTLET JACKET UP TO WELDING MALE NIPPLE - AISI 304	0.3	G1"	1
H1	INSULATION MINERAL WOOL 40mm WITH DECORATIVE CASING FOR DIMPLE JACKET ON TANK SHELL D=750mm H=425mm 2.0mm - AISI 304	-	-	1
I1	SAFETY GRID 582mm x 314mm ON HINGED LID - AISI 316	-	-	1

Surface	Outside	2B	Welding seam	Outside	strip grinded to Ra<1.6
	Inside	2B		Inside	flat grinded to Ra<0.8

1.6 | min.0,5x45° | ±30' | // ⊥ ◎ L=1000±1 | >1000 ±2 <1000 ±1

Drawn.: I.N.	Scale 1:16	Mass 130 kg	AISI 316 AISI 304	
Checket: K.I.	0.2m3			
Eng.App.: D.M.		1.4.2015 г.		Sheet 1/1