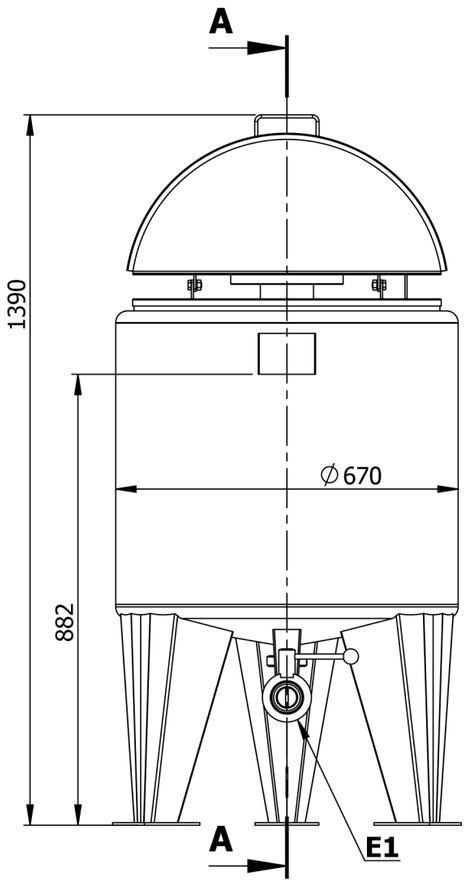

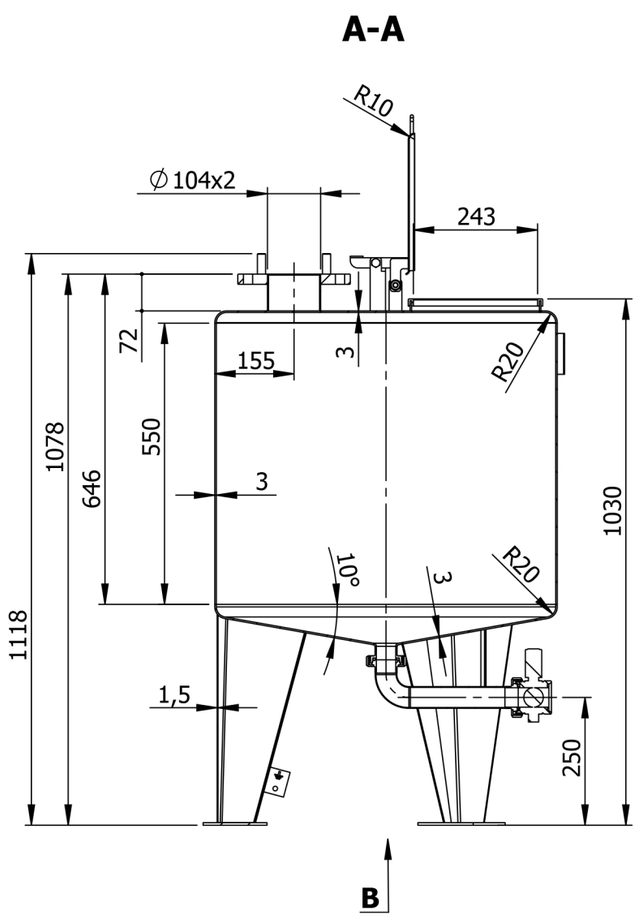

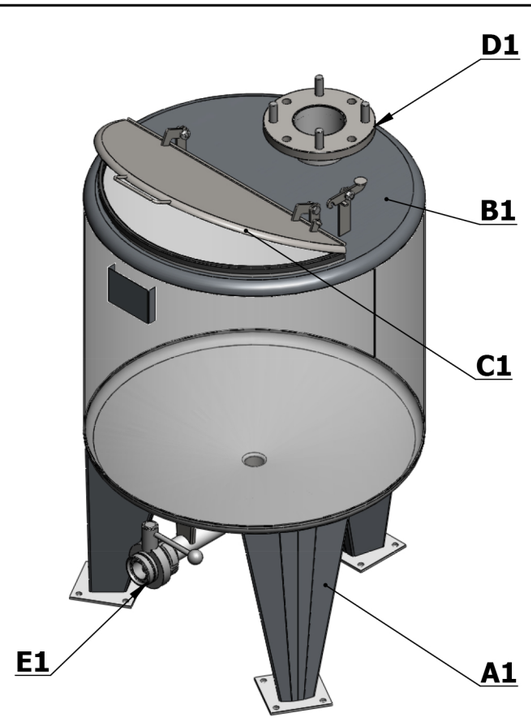

Construction date: 2013	
Material vessel: AISI 316 / AISI 304	Capacity: 200 L
Workpressure: ATM.	Power consumption:0,37kW
Maximal density: 1 kg/dm^3	RPM:1200 min^{-1}
	Serial №

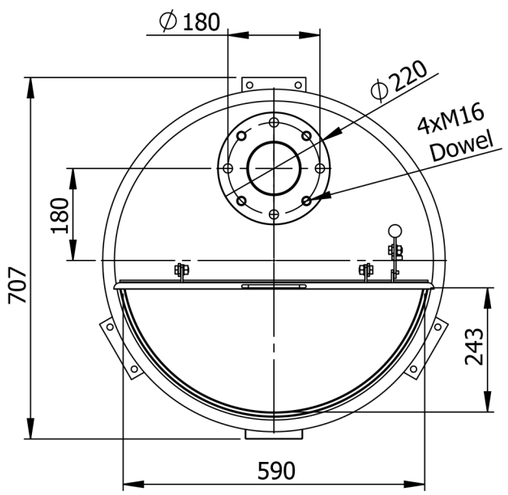

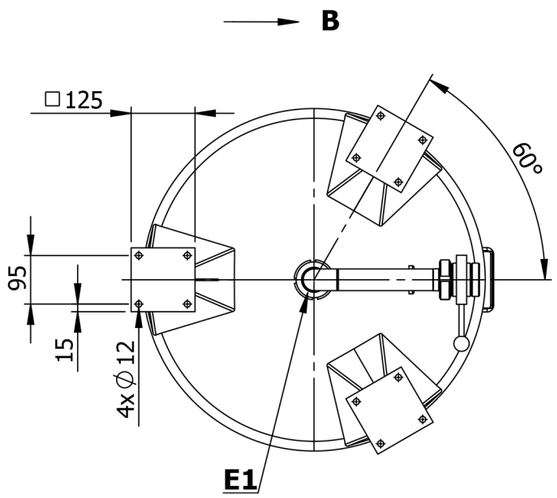

Item	Description	PN MPa	DN mm.	Qty.
A1	LEG ON ANCHOR PLATE (anchor bolts are not included)	-	-	3
B1	1/2 FIXED LID	-	-	1
C1	1/2 HINGED LID	-	-	1
D1	INLET FOR AGITATOR UP TO FLANGE DIN2576 - agitator is not included	10	100	1
E1	TOTAL OUTLET UP TO BUTTERFLY VALVE M/M	atm.	40	1

Surface	Outside	2B	Welding seam	Outside	Strip grinded 2x20 Ra<1.6
	Inside	2B		Inside	Flat grinded Ra<0.8

1.6 | min.0,5x45° | ∠ ±30' | // ⊥ ◎ L=1000±1 | ↔ >1000 ±2, <1000 ±1

Drawn.: BB	Scale 1:12	Mass 70 kg	AISI 316 AISI 304	
Checket: KI	Vertical tank V=0,2m3			
Eng.App.: DM		23.9.2013 г.		Sheet 1/1

file: Tank V0,2m3-6